MODEL NO. 60096 Look-Out Panel

PARTS LIST

DESCRIPTION	No. REQ'D	PART NUMBER
Look-Out Panel	1	302774
Hardware Complete	1	306525
5" O.D. Panel Clamp	4	302099*
1/4" x 3/4" Drive Rivet	4	168449*
3/8" Barrel Nut	4	804804*
3/8" Flat Washer	4	817410*
3/8" Heavy Hex Nut	4	804200*
3/8" x 1 1/2" P.B.H.C.S. w/Patch	8	812053*

Unless Otherwise Specified, All Units of Measure are Each
****Included in Hardware***

Warning: Small parts and hardware items may present a potential choking hazard. Promptly remove all unused parts from play area. Any bolt end protruding more than two full threads beyond the face of the nut causes risk of clothing entanglement. Promptly cut-off flush, file smooth, and treat to prevent corrosion.

Note: Peen Tee-Nuts and Flatwashers to match radius of pipe after assembly is complete.
Note: Loctite (supplied by others) should be used on any non-patch hardware.

SPECIFICATIONS:

Clamps are cast from a 356 high-strength aluminum alloy with a baked on polyester powder-coated finish. Panel Side Brackets are fabricated from 3/16" steel angle with 1-5/16" O.D. 14-gauge galvanized steel tubing welded for attachment. Panel is cut from a sheet of high density .850" thick extruded solid polyethylene with color molded in and UV-stabilized.

Primary hardware is stainless steel.

Weight: 44 lbs. / 19.8 kg.

Installation Instructions:

1. Attach the Look-Out Panel to the Upright Posts using Panel Clamps (refer to Clamp Sub-assembly sheet for details), and 3/8"x1-1/2" P.B.H.C.S. w/ Patch with 3/8" Flat Washers and 3/8" Barrel Nuts as shown in Assembly Drawing.

   IMPORTANT! Avoid creating any gaps between the components, which fall between 3-1/2" and 9". It has been shown that such gaps create entrapment points, which can trap a child and cause injury.

   Note: Panels should be positioned so that the top of each panel is at least 38" above the deck surface. If a conflict exists between a panel clamp and an adjacent component's clamp, adjust the panel upward (Never lower than 38" above deck) without exceeding a maximum gap of 3-1/2" between the lower end of the panel and the top edge of the deck.

2. When the assembly is finished and satisfactory, install Drive Rivets in all clamps to ensure clamps cannot slide down posts. See Pipe Clamp sub-assembly sheet. ***It is very important that all Drive Rivets be installed before allowing use of the equipment, as clamps are not designed to support substantial weight without them***. Also eliminate sharp points and sharp edges (burring) on installed hardware like bolts, nuts, etc.

3. Install resilient surfacing material within the *use zone* of play structure, in accordance with ASTM specifications F1292 appropriate for the fall height of each structure. Refer to the *Safety Guidelines*.

MAINTENANCE PROCEDURE:

Periodically check hardware for tightness, and tighten as necessary. Always check all parts for breakage or wear, and immediately put equipment out of service until any faulty parts are repaired or replaced. Check all decks for Plastisol-coating peeling and touch-up with Plastisol if necessary. Check for holes on deck, clean if necessary. Check periodically resilient surfacing for appropriate depth and remove extraneous materials that could cause injury, infection, or disease. Maintain detailed installation, inspection, maintenance, and repair records for each public-use playground equipment.

SuperMax Play Systems

Model No: _____

Desc: _____

MODEL NO. 60096 Look-Out Panel

NOTE:
TOP EDGE OF PANEL MUST BE 38" [965mm] OR GREATER ABOVE ELEVATED PLATFORM SURFACE FOR USE BY 5-12 YEAR OLDS.

TOP EDGE OF PANEL MUST BE 29" [736mm] OR GREATER ABOVE ELEVATED PLATFORM SURFACE FOR USE BY 2-5 YEAR OLDS.

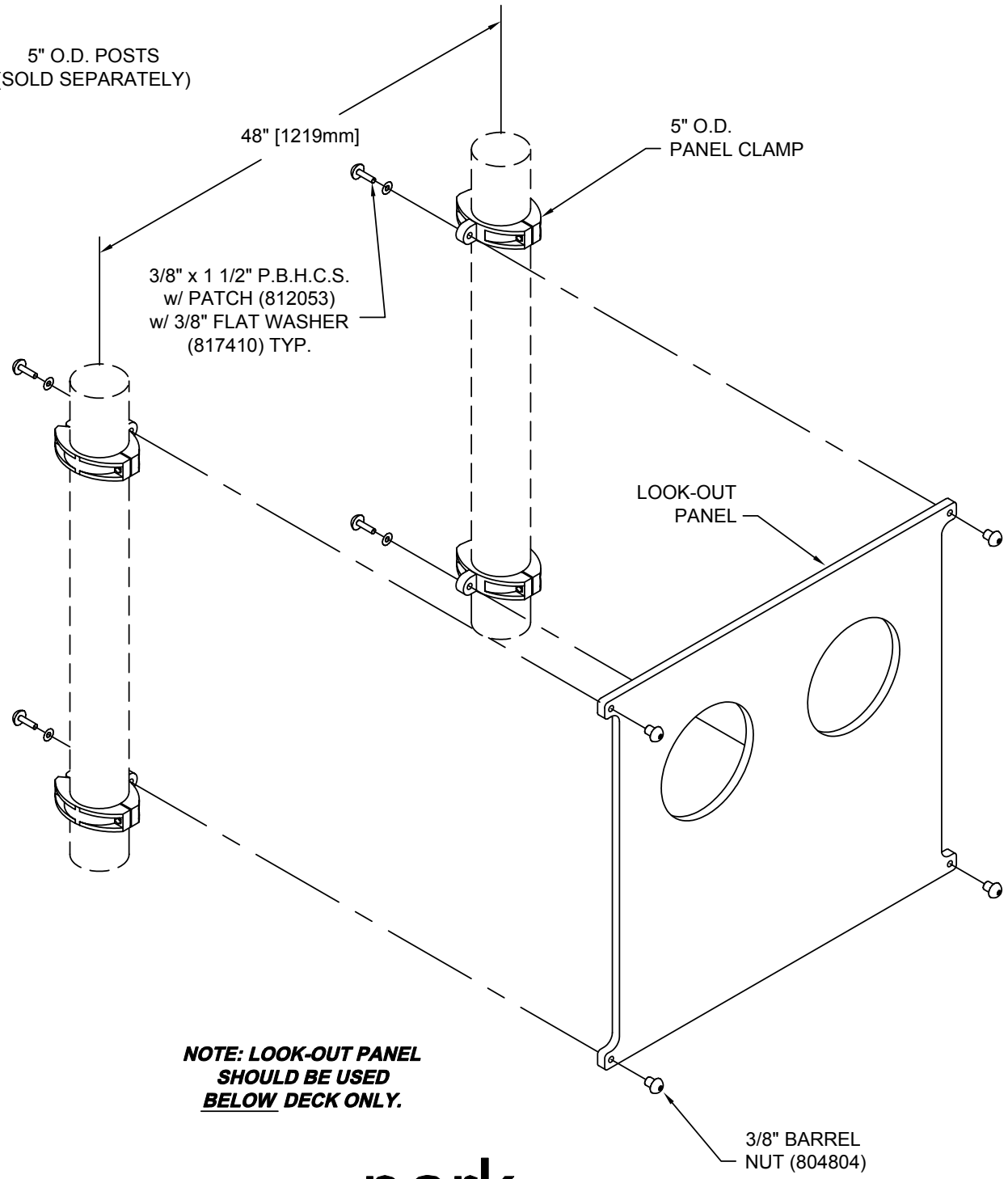

NOTE: LOOK-OUT PANEL SHOULD BE USED <u>BELOW</u> DECK ONLY.